8 to 12GHz 20dB Directional Coupler

FPC06302

COMPEX • DLI • JOHANSON MFG
NOVACAP • SYFER • VOLTRONICS
www.knowlescapacitors.com

DESCRIPTION

DLI introduces its new high frequency surface mountable catalog direction couplers. These couplers incorporate DLI's high dielectric ceramic materials which provide small size and minimal performance variation over temperature. The components are well matched for monitoring incident and reflected power.

FEATURES

- Small Size
- Fully Shielded Component
- Solder Surface Mount Package
- Moisture Sensitivity Level: MSL1
- Frequency Stable over Temperature
- Operating & Storage Temp: -55˚C to +125˚C
- Characteristic Impedance: 50Ω

SPECIFICATIONS*

Parameter	Frequency (GHz)	Min	Max
Passband Insertion Loss* (dB)	8 - 12		0.3
Min Passband Return Loss (dB)		15	
Coupling (dB)		19	22
Directivity (dB)		15	
Input Power (W)			TBD
Size (LxWxH)	0.120 x .080 x .015 in 3.048 x 2.032 x .381mm		

*Electrical specifications based on typical mounted performance at room temperature. Insertion loss shall vary ±0.5dB over temperature.

Typical Measured Performance

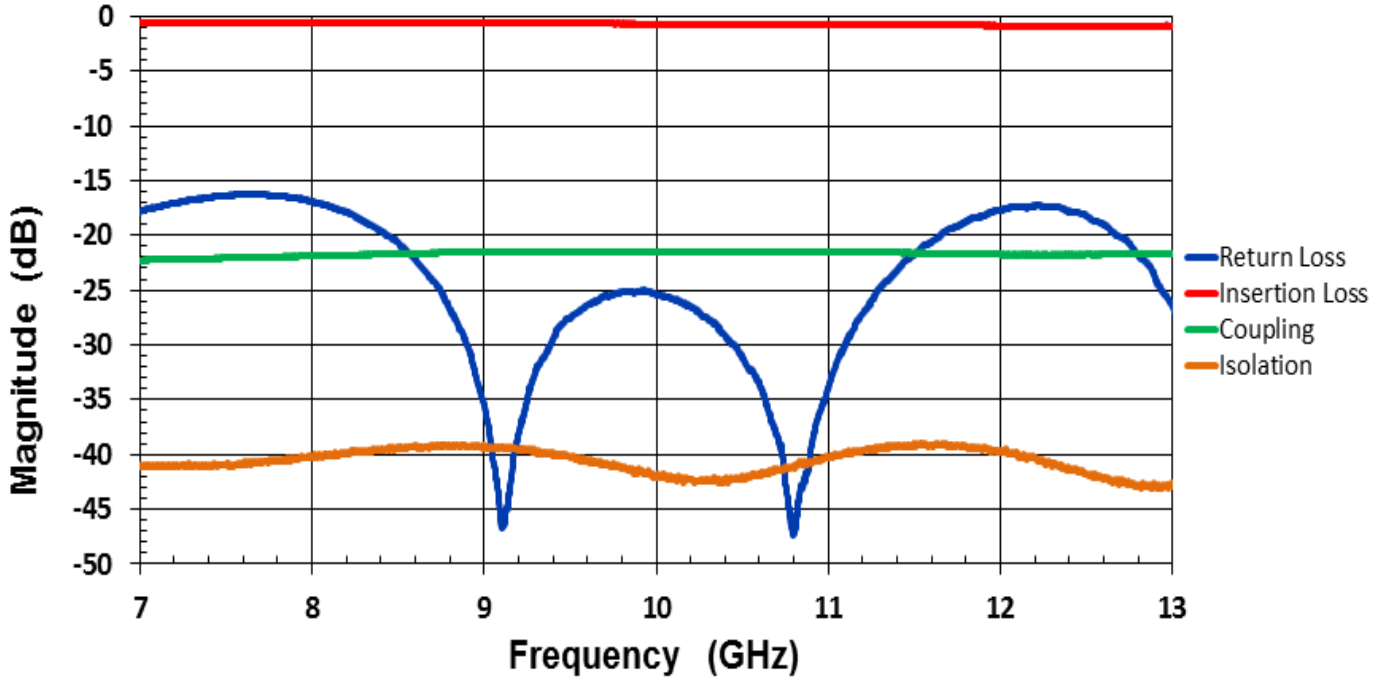

*Typical measured performance mounted on RO4350B test board with SMA connectors at 25°C.

2777 Route 20 East, Cazenovia, NY 13035| Ph.: (315)655-8710 | KCCSales@knowles.com

April 2018

DIELECTRIC LABORATORIES
a Knowles Precision Devices brand

knowles PRECISION DEVICES
COMPEX • DLI • JOHANSON MFG
NOVACAP • SYFER • VOLTRONICS
www.knowlescapacitors.com

8 to 12GHz 20dB Directional Coupler

FPC06302

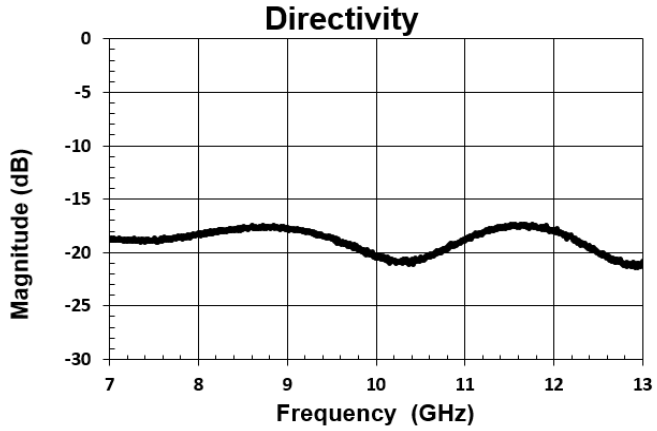

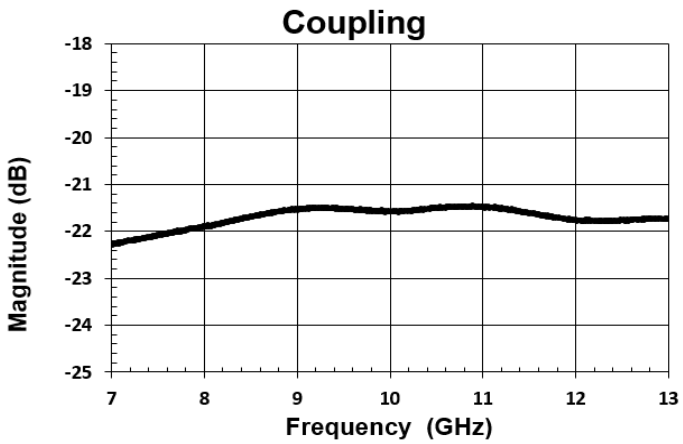

Physical Dimensions

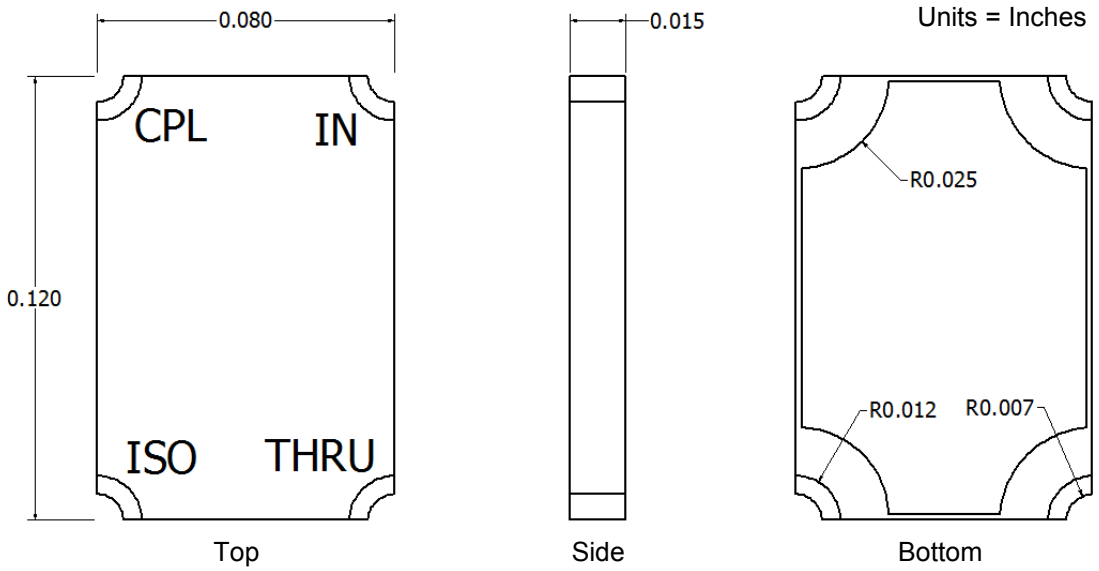

Recommended PCB Layout

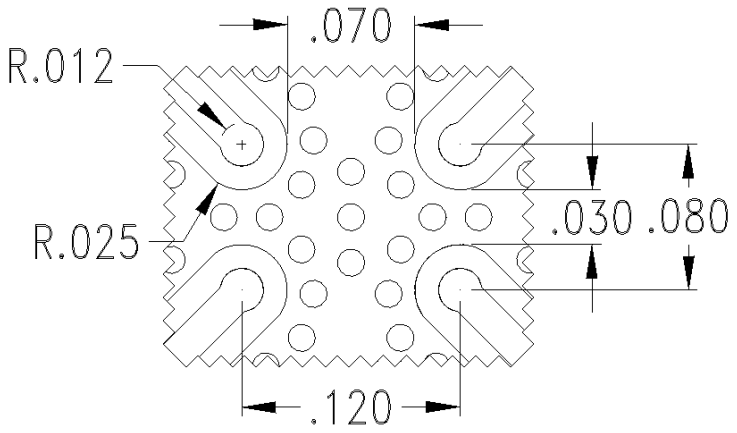

- 50Ω trace dimensions are application specific.
- Ensure adequate grounding beneath the part.

ISO 9001 QMI-SAI Global
AS 9100 QMI-SAI Global
RoHS 2011/65/EU Lead Free

2777 Route 20 East, Cazenovia, NY 13035| Ph.: (315)655-8710 | KCCSales@knowles.com

April 2018

Mouser Electronics

Authorized Distributor

Click to View Pricing, Inventory, Delivery & Lifecycle Information:

Knowles:
FPC06302